A-A (3: 1)

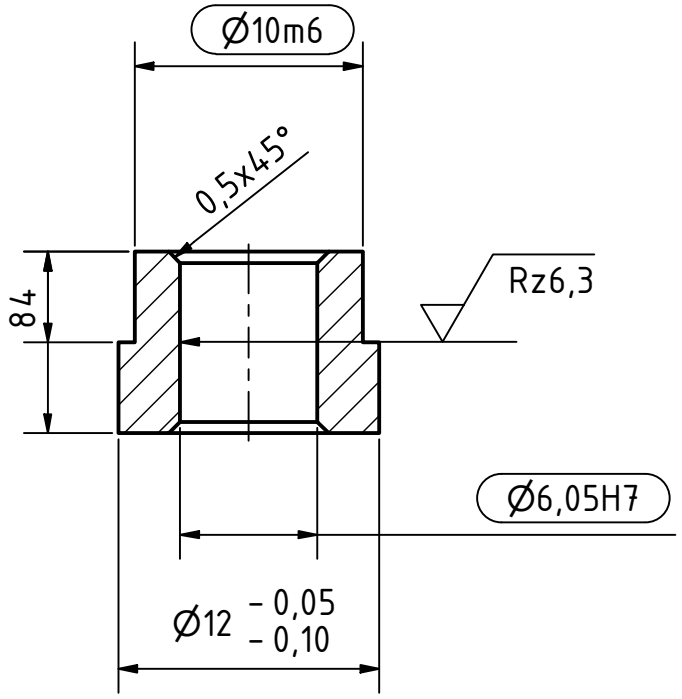

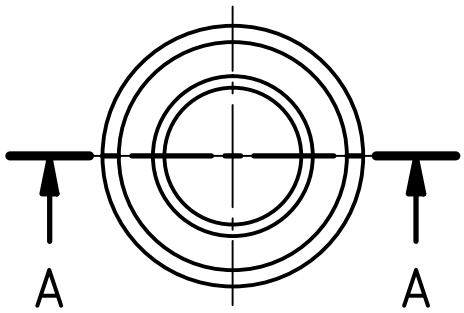

Rz16 (Rz6,3)

0,1 / 0,1	workpiece edges DIN ISO 13715	general tolerances DIN ISO 2768- surfaces DIN ISO 1302	amount: 1	scale: 3: 1
			material: CuSn8	pre-product:

rev.	alteration	date	name

	date	name
designed:	07.07.2021	Rüdiger Widera
approved:	05.08.2021	Tim Kanngießer
status:	released	
part rev.:	1.0	draw.rev.: A

designation: Bushing Mendrel
part number: ITPTv2.01.00.18
field of application: ITkPixTool v2.0
project: Atlas ITk Pixel Modules

GEORG-AUGUST-UNIVERSITÄT GÖTTINGEN
2.Physikalisches Institut
Friedrich-Hund-Platz 1
D-37077 Göttingen
Tel.: 0551 3927625
tim.kanngiesser@uni-goettingen.de
ruediger.widera@uni-goettingen.de

sheet 1/1 A4