A-A (2: 1)

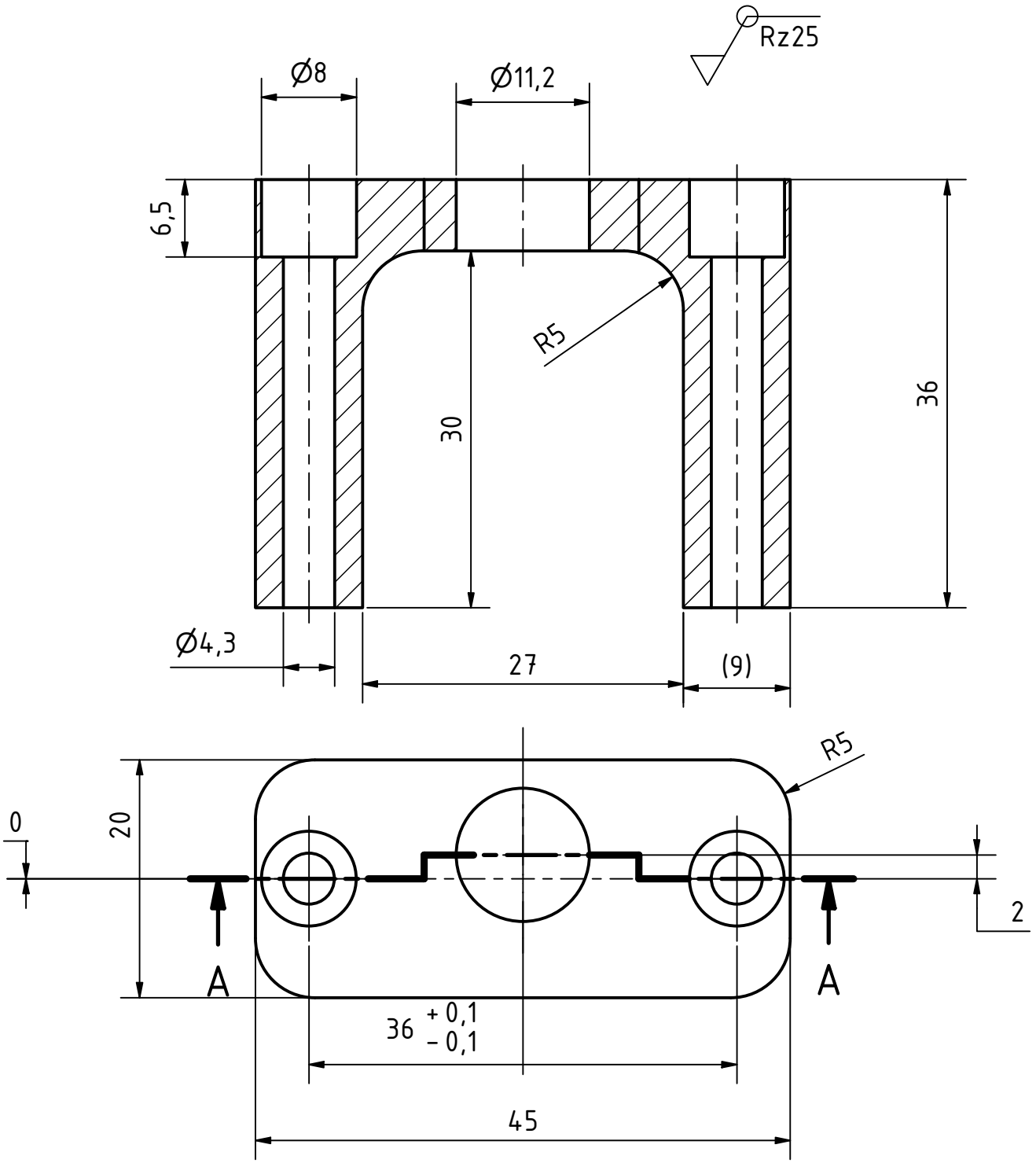

0.1 0.1 debured edges	workpiece edges DIN ISO 13715	general tolerances DIN ISO 2768-m surfaces DIN ISO 1302	amount: 1	scale: 2: 1
			material: EN AW 7021 T6	pre-product:

	date	name
designed:	20.07.2021	Rüdiger Widera
approved:		
status:	released	
part rev.: 1.0	draw.rev.: A	

designation: Flange tube coupling
part number: ITPTv2.01.00.22
field of application: ItkPixTool v2.0
project: Atlas ITk Pixel Modules

rev.	alteration	date	name

GEORG-AUGUST-UNIVERSITÄT GÖTTINGEN
2.Physikalisches Institut
Friedrich-Hund-Platz 1
D-37077 Göttingen
Tel.: 0551 3927625
tim.kanngiesser@uni-goettingen.de
ruediger.widera@uni-goettingen.de

sheet 1/1 A4