fit	allowance
4,5g6	-4µm -12µm
9g6	-5µm -14µm
18g6	-6µm -17µm

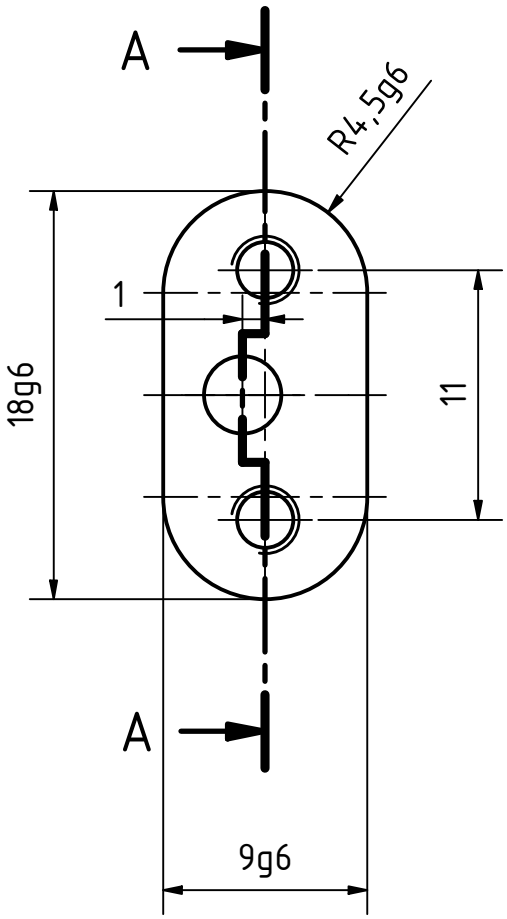

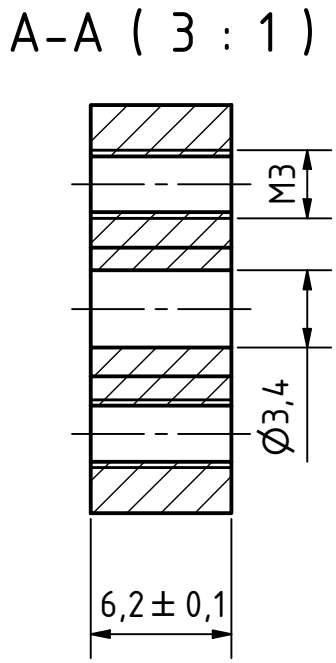

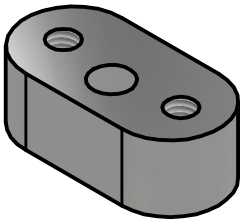

Rz16

geometric dimensioning and tolerancing DIN EN ISO 1101 | -0,2 | +0,2

debured edges

workpiece edges DIN ISO 13715

general tolerances DIN ISO 2768-m/ K

surfaces DIN ISO 1302

amount: 2	scale: 3 : 1
material: 1.4305	pre-product: -

	date	name
designed:	11.07.2022	Tim Kanngießer
approved:	11.07.2022	R.Widera
status:	released	
part rev.: 1.0	draw.rev.: A	

designation: Insert Lateral Flex Jig Basebody

part number: ITPTv2.02.00.10

field of application: ITkPixTool v2.0

project: Atlas ITk Pixel Modules

rev.	alteration	date	name

GEORG-AUGUST-UNIVERSITÄT GÖTTINGEN

2.Physikalisches Institut
Friedrich-Hund-Platz 1
D-37077 Göttingen

Tel.: 0551 3927625
tim.kanngiesser@uni-goettingen.de
ruediger.widera@uni-goettingen.de

sheet 1/1 A4