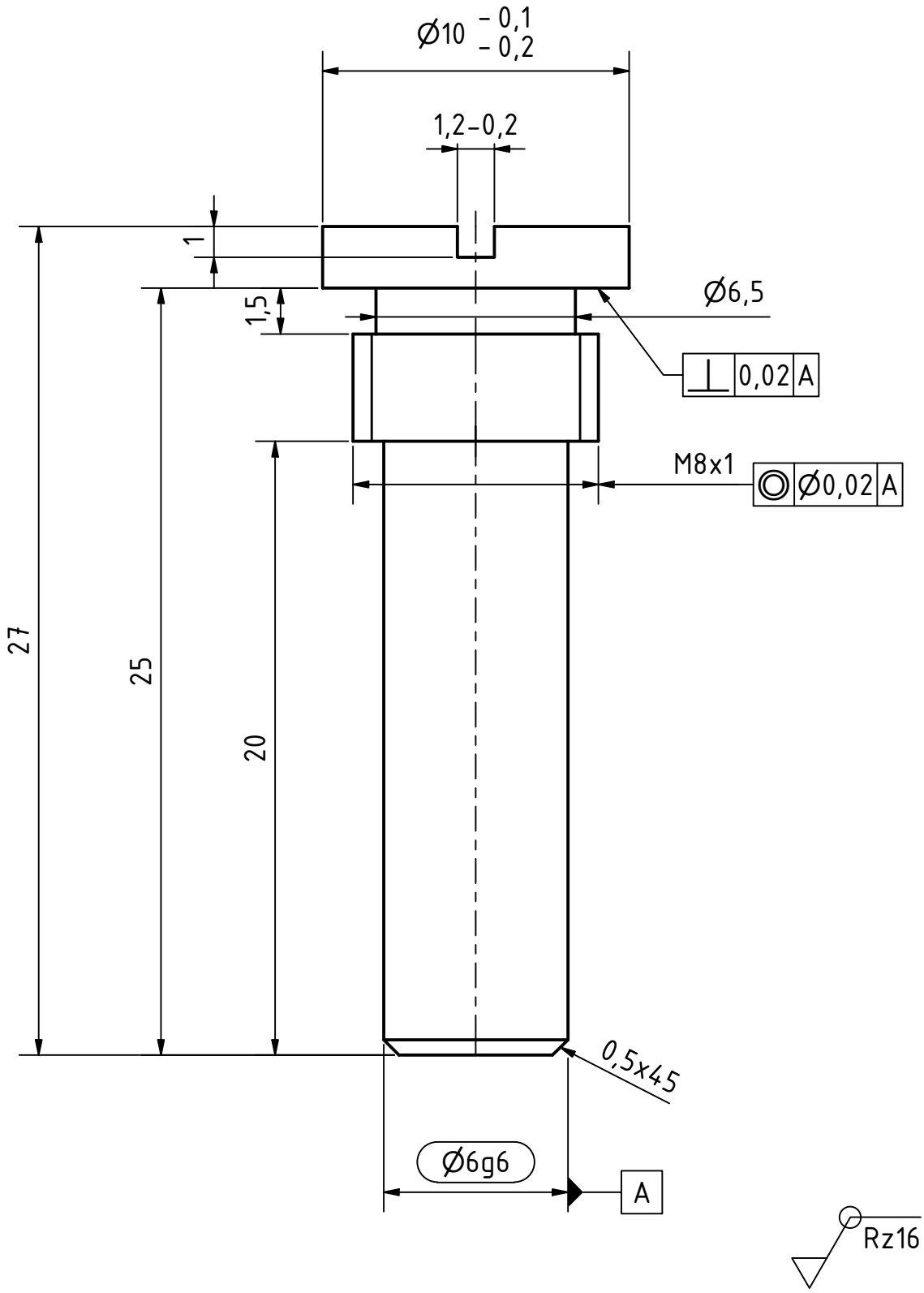

0,1 0,1

workpiece edges
DIN ISO 13715

general tolerances
DIN ISO 2768-m/H
surfaces
DIN ISO 1302

amount: 4	scale: 5: 1
material: X8CrNiS18-9	pre-product: Round Bar

	date	name
designed:	14.04.2021	Rüdiger Widera
approved:		
status:	released	
part rev.:	1.0	draw.rev.: A

designation: Pressure Roller Screw
part number: ITPTv2.03.00.09
field of application: ITkPixTool v2.0
project: Atlas ITk Pixel Modules

rev.	alteration	date	name

GEORG-AUGUST-UNIVERSITÄT GÖTTINGEN
2.Physikalisches Institut
Friedrich-Hund-Platz 1
D-37077 Göttingen
Tel.: 0551 3927625
tim.kanngiesser@uni-goettingen.de
ruediger.widera@uni-goettingen.de

sheet 1/1
A4